# S-35 Single Output Series



Size：129*98*38mm

## Features:

- Universal full range AC input power
- Built-in EMI filter, tiny ripple
- Protections short circuit/overload/over voltage
- Cooling by free air convection
- 43,000 hours of continuous operation at 25℃
- 100% full load burn-in test
- Compliance to IEC/EN60335-1 (PD3) and IEC/EN61558-1,2-16 suitable for home appliance
- 2 years warranty

## SPECIFICATION

CE RoHS

| Model | | S-35-5 | S-35-12 | S-35-15 | S-35-24 | S-35-48 |
|---|---|---|---|---|---|---|
| OUTPUT | DC VOLTAGE | 5V | 12V | 15V | 24V | 48V |
| | RATED CURRENT | 7A | 3A | 2.3A | 1.5A | 0.73A |
| | CURRENT RANGE | 0 ~ 7A | 0~3A | 0 ~ 2.3A | 0 ~ 1.5A | 0 ~ 0.73A |
| | RATED POWER | 35W | 36W | 34.5W | 36W | 35W |
| | RIPPLE NOISE(Max) | 50mVp-p | 50mVp-p | 80mVp-p | 100mVp-p | 100mVp-p |
| | VOLTAGE ADJ.RANGE | 4.5 ~ 5.5V | 10.8 ~ 13.2V | 13.5~16.5V | 21.6~ 26.4V | 43.2 ~ 52.8V |
| | VOLTAGE TOLERANCE | ±1.0% | ±1.0% | ±1.0% | ±1.0% | ±1.0% |
| | LINE REGULATION | ±0.5% | ±0.5% | ±0.5% | ±0.5% | ±0.5% |
| | LOAD REGULATION | ±0.5% | ±0.5% | ±0.5% | ±0.5% | ±0.5% |
| | SETUP,RISE TIME | 200ms, 100ms | | | | |
| | HOLD UP TIME (Typ.) | 30ms (full load ) | | | | |
| INPUT | VOLTAGE RANGE | 85 ~ 132VAC/170~264VAC by switch 240~370VDC | | | | |
| | FREQUENCY RANGE | 47 ~ 63Hz | | | | |
| | EFFICIENCY(Typ.) | 75% | 80% | 82% | 82% | 82% |
| | AC CURRENT(Typ.) | 0.8A/115V 0.3A/230V | | | | |
| | INRUSH CURRENT(Typ.) | COLD START 18A/115VAC 36A/230V | | | | |
| | LEAKAGE CURRENT | <0.5mA / 240VAC | | | | |
| PROTECTION | OVERLOAD | 115 ~ 135% rated output power | | | | |
| | | Protection tye:Hiccup mode,recovers automatically after fault condition is removed | | | | |
| | OVER VOLTAGE | 5.75 ~ 6.75V | 13.8 ~ 16.2V | 17.25 ~ 20.25V | 28.4 ~ 32.4V | 55.2 ~ 64.8V |
| | | Protection type : Shut off o/p voltage, clamping by zener diode | | | | |
| ENVIRONMENT | WORKING TEMP. | -10 ~ +60℃ (Refer to derating curve ) | | | | |
| | WORKING HUMIDITY | 20 ~ 90% RH non-condensing | | | | |
| | STORAGE TEMP.,HUMIDITY | -20 ~ +85℃, 20 ~ 95% RH | | | | |
| | TEMP.COEFFICIENT | ±0.03%/℃ (0 ~ 50℃) | | | | |
| | VIBRATION | 10 ~ 500Hz, 2G 10 min/1cycle,60min.each X Y Z axes | | | | |
| SAFETY | SAFETY STANDARDS | GB4943.1, EN 60950.1 APPROVED | | | | |
| | WITHSTAND VOLTAGE | I/P-O/P:1.5KVAC I/P-FG:1.5KVAC O/P-FG:0.5KVAC | | | | |
| | ISOLATION RESISTANCE | I/P-O/P, I/P-FG, O/P-FG:100M Ohms / 500VDC | | | | |
| | EMC EMISSION | EN61000-3-2:2014/EN61000-3-3:2013 | | | | |
| | EMC IMMUNITY | EN 55032:2015/EN55035:2017/60950-1 | | | | |
| OTHERS | MTBF | ≥720.6K hrs MIL-HDBK-217F(25℃) | | | | |
| | DIMENSION | 129*98*38mm (L*W*H) | | | | |
| | PACKING | 0.4Kg; 45pcs/18Kg/0.9CUFT | | | | |
| NOTE | 1. All parameters NOT specially mentioned are measured at 230VAC input,rated load and 25 of ambient temperature.<br>2. Ripple noise are measured at 20MHz of bandwidth by using a 12 twisted pair -wire terminated with a 0.1uf and 47uf parallel capacitors.<br>3. Tolerance includes set up tolerance,line regulation and load regulation.<br>4. Derating output is required under low input voltage. Please refer to the derating curve for details.<br>5. The power supply should be considered as a part of the components in the system. All EMC tests will test the test samples on a metal iron plate with a thickness of 1mm, a length of 360mm width of 360mm. | | | | | |

## Mechanical Specification

Unit:mm

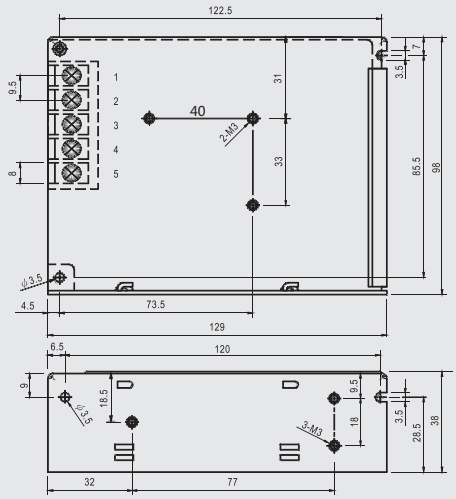


Terminal Pin No.Assignment:

| Pin No. | Assigment | Pin No. | Assigment |
|---|---|---|---|
| 1 | AC/L | 4 | DC OUTPUT -V |
| 2 | AC/N | 5 | DC OUTPUT +V |
| 3 | FG⏚ | | |

## Block Diagram

fosc:60KHz

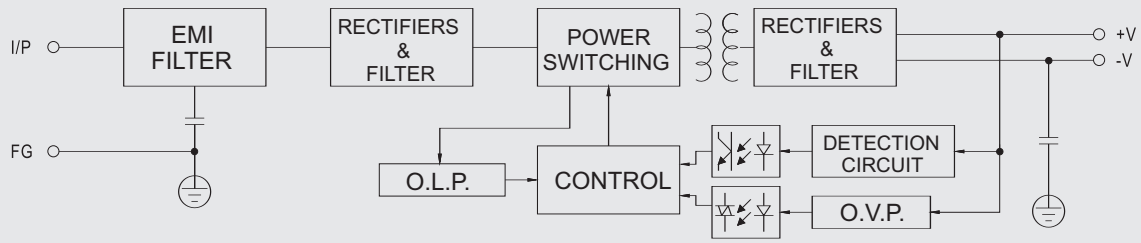


## Derating Curve

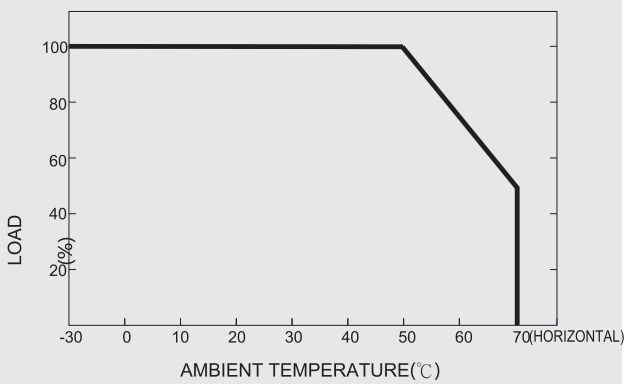


## Static Characteristic

